Chapter 2: Operation

The notebook computer has many advanced features to help you with your computer work. This chapter describes each of the computer's hardware features and shows you how to use them.

Before you begin working with the internal components of the computer, remove the battery and disconnect the AC power adapter.

Make sure you wear an anti-static wrist strap to ground yourself before working with or repair the internal components. Static electricity may damage the components.

Upgrading the Processor Module
Expanding the Memory
Using the Hard Disk Drive
Using the Floppy Disk Drive
Using the CD-ROM
Using the PC Card Sockets
Using the Hot Keys
Using the Numeric Keypad
Using the Power Management
Attaching the Peripheral Devices

Upgrading the Processor Module

The notebook supports Intel Pentium III processor at 450MH and 500MHz core frequencies.

Replacing the Processor

1. Remove all the power sources (AC power and battery).
2. Turn the computer over.
3. Remove the CPU cover.
4. Remove the screws that fasten the heat sink mounted on the processor.
5. Carefully detach the processor from the mainboard.

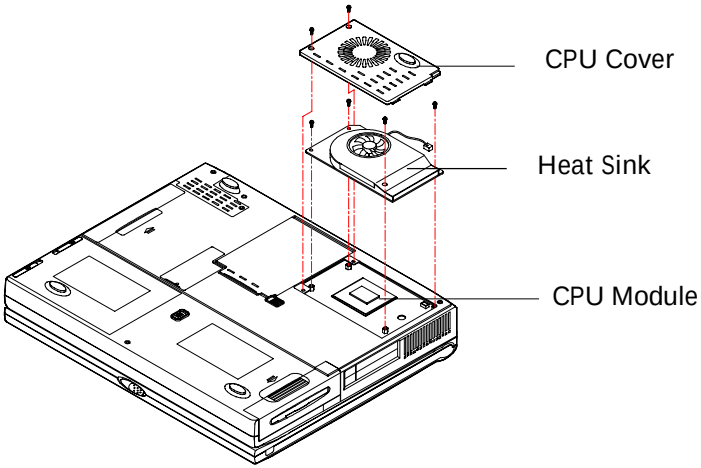

Note:
Wait for the CPU to cool down before replacing it.

Reinstalling the Heat Sink

Reinstall the CPU in the reverse order of removal. Make sure that the heat sink cable is properly installed.

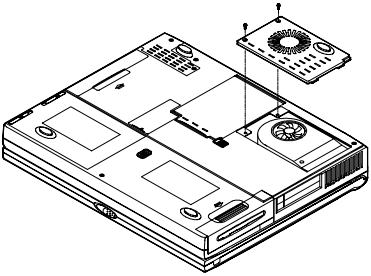

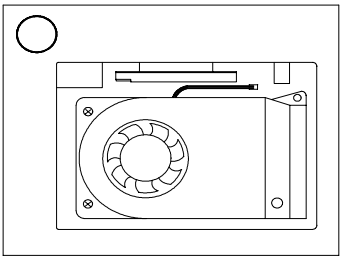

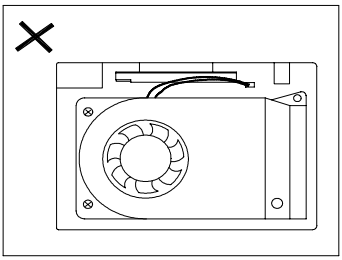

Expanding the Memory

The system has two memory sockets for PC100 RAM modules to expand the memory up to 256MB. The RAM modules should be a 144-pin SODIMM (Small Outline Dual In-line Memory Module) type. The total memory size is automatically detected by the POST routines. With the following different RAM combinations (for reference), the total memory size can be:

Bank 0 (64-bit)	Bank 1 (64-bit)	Power	Total Size
32MB	0MB	3.3V	32MB
32MB	32MB		64MB
64MB	0MB		64MB
64MB	32MB		96MB
64MB	64MB		128MB
128MB	0MB		128MB
128MB	32MB		160MB
128MB	64MB		192MB
128MB	128MB		256MB

Accessing the Memory Sockets

1 Turn the system power off.

2 Press the two keyboard latches to elevate the keyboard from it normal position.

3 Carefully lift the keyboard assembly out to expose the mainboard. Locate the memory sockets.

Note:

- The memory socket Bank 0 is a reverse type, make sure you install the memory module with reverse side to fit its connector.
- Please ensure that each edge of the memory module (SDRAM) has no component mounted on. It is recommended to use the RAM module that complies with Intel unbuffered SO-DIMM (67.6mmX31. 75mm). Please consult your dealer for the detail.

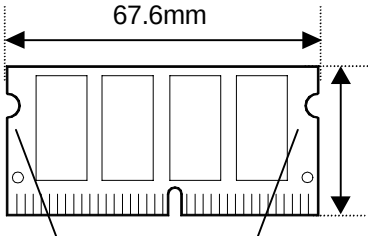

Non-component area
(The edges of the memory module are the non-component area.)

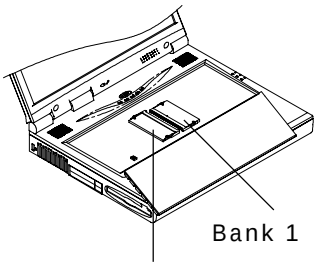

Installing the Memory Module

Follow the steps below to install the memory module:

1 Turn the system power off.

2 Press the two keyboard latches to elevate the keyboard from its normal position.

3 Carefully lift the keyboard assembly out to expose the mainboard. Locate the memory sockets.

4 Insert the memory module at a slight angle (45 degree) and fit its connectors into the socket firmly.

Note: Insert Banks 0 first, then Bank 1.

5 Press the two edges of the memory module to make it locked into the place.

6 Reinstall the keyboard assembly.

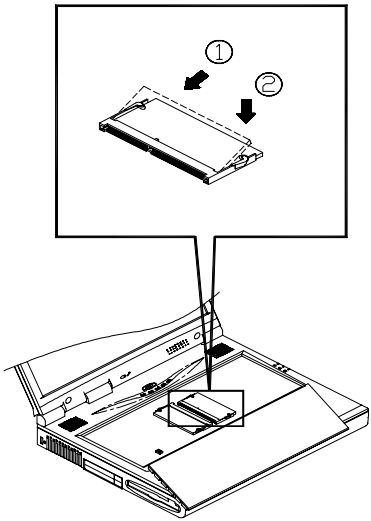

Removing the Memory Module

1 Turn the system power off.

2 Press the two keyboard latches to elevate the keyboard from its normal position.

3 Carefully lift the keyboard assembly out to expose the mainboard. Locate the memory sockets.

4 Gently pull the two latches outward on both ends of the module. The module will pop up.

5 Remove the memory module.

6 Reinstall the keyboard assembly.

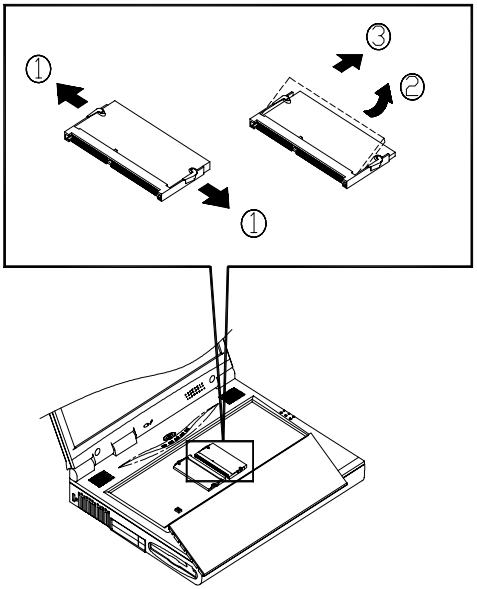

Using the Hard Disk Drive

The hard disk drive with 2.0GB storage capacity is mounted in a removable case and can be taken out to accommodate other 2.5" hard disk drives with a height of 12.7mm. The system supports PIO mode 4, Master mode IDE, and provides a high performance data transfer rate at speeds up to 33 MBytes/ second (ATA-33).

Removing the Hard Disk Drive Module

1 Turn the system power off.

2 Turn the computer over.

3 Locate the Hard Disk Drive latch.

4 Press the latch in the direction as indicated. Then take the hard disk drive out of the bay.

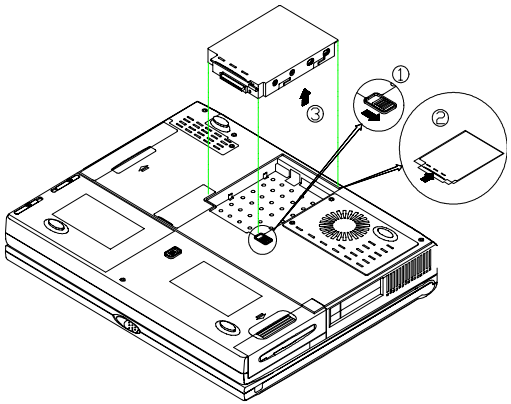

Replacing the Hard Disk Drive

1. Remove the two screws on each side of the case.
2. Gently disconnect the cable from the hard disk drive.
3. Connect the replacement hard disk drive with the cable.
4. Insert the replacement hard disk drive into the case.
5. Fasten the screws of each side.

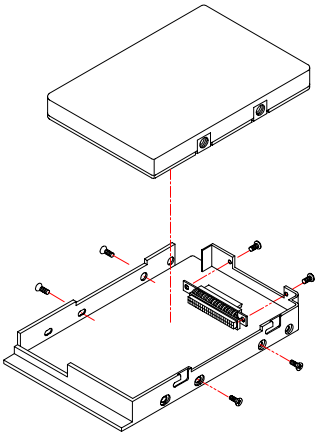

Inserting the Hard Disk Drive Module

1 Insert the hard disk drive module into the bay

2 Make sure you feel the drive click into the position when it is seated properly.

Using the Floppy Disk Drive

The computer is equipped with a removable 1.44MB, 3.5" floppy disk drive module. It is usually designated as drive A: by default and can be used as a boot device if properly set in SCU (please refer to Chapter 3: BIOS Utilities). You may replace the floppy disk drive module with the following options: a 120MB LS-120 drive (of 12.7mm high), or a 2.5" secondary IDE hard disk drive. Contact your dealer for the detail.

Inserting/Removing Diskettes

When using the floppy drive, always insert your floppy diskette label-side up. To remove your diskette, press the eject button on the top-right corner of the floppy drive.

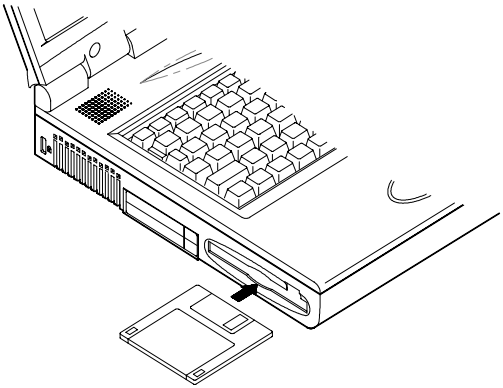

Removing/Inserting the Floppy Disk Drive

Removing

1. Push the latch in the direction as indicated.
2. Draw the floppy drive out of the bay.

Inserting

1. Turn off the power. Turn the computer over.
2. Insert the drive into the bay.
3. Make sure it clicks into the bay.

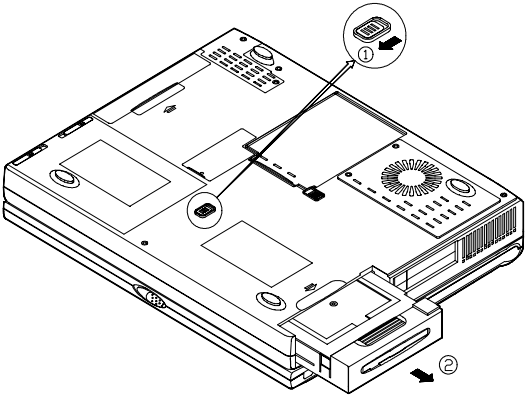

Using the CD-ROM

The Notebook is equipped with a removable CD-ROM drive module. It is usually designated as drive D by default and may be used as a boot device if properly set (please refer to Chapter 3, BIOS Utilities). You may replace CD-ROM drive module with a DVD-ROM drive (of 12.7mm).

To insert a CD, press the Eject Button and place the CD into the Disc Tray with label-side facing up. Push the CD tray in and you are ready to start. The Busy Indicator will light up while data is being accessed or while an audio CD is playing. When the power is unexpectedly interrupted, insert an instrument such as a straightened paper clip into the Emergency Eject Hole to eject the tray.

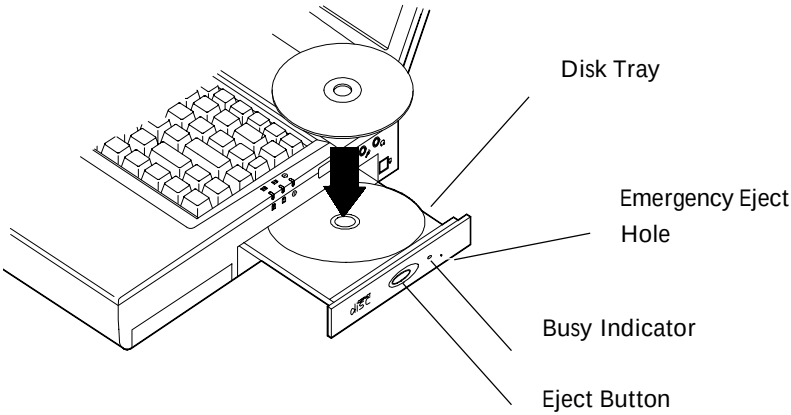

Removing the CD-ROM Module

1 Turn off the power. Turn the Notebook over.

2 Take the cover away as the figure.

3 Press the edge of the connector.

4 Draw the CD-ROM module out of the bay.

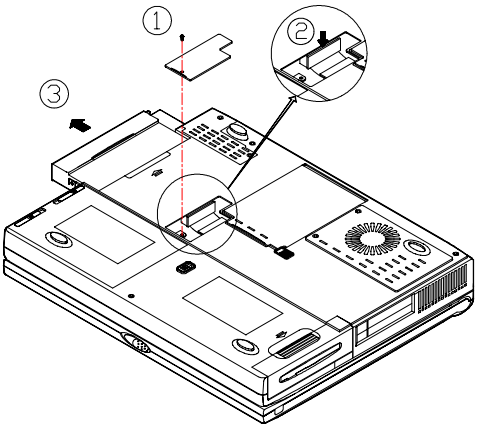

Inserting the CD-ROM Module

1 Turn off the power. Turn the Notebook over.

2 Take the cover away.

3 Insert the CD-ROM module into the bay.

4 Insert the cover to fix the placement.

Loading Compact Discs

1 Turn on the power.

2 Press the CD-ROM eject button; the disc tray will pop out partially.

3 Pull the disc tray out.

4 Carefully load the CD into the disc tray with the label-side facing up. Press it gently to ensure it fits into the place.

5 Push the tray into the computer.

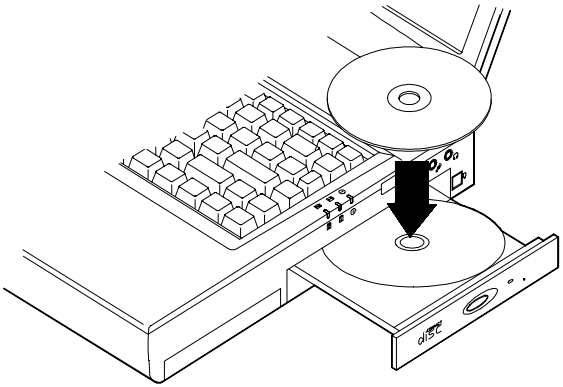

Handling Compact Discs

Proper handling of your CDs will prevent them from being damaged and ensure the accessibility of data stored in them.

- Hold the CD by the edges; do not touch the surface of the disc.
- Use clean, soft, and dry cloth to remove dust or fingerprints.
- Do not use pen to write on the surface.
- Do not attach any paper or other materials to the surface of the disk.
- Do not store or place the CD in the high-temperature areas.
- Do not use benzine, thinners, or other cleaners to clean the CD.
- Do not bend the compact disc.

Using the PC Card Sockets

The computer is equipped with two PC card sockets (previously referred to as PCMCIA). Both sockets support two 3.3V/5V Type II PC cards or one Type III PC card.

The upper socket named Socket A is capable of ZV (Zoomed Video), which allows a direct connection between a PC card and video devices that enables high quality video playback.

Inserting PC Cards

1. Open the access door
2. Align the PC card with the slot and push it in firmly until it locks into the place.

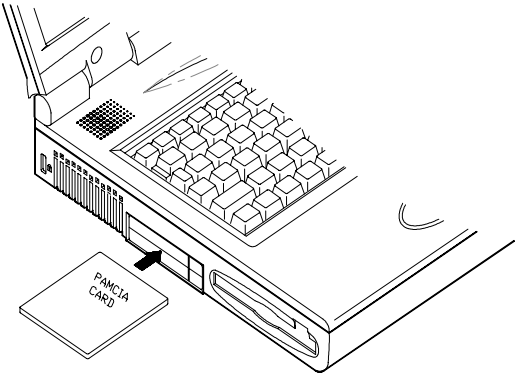

Removing PC Cards

The two eject buttons are located next to the two slots. Press the appropriate eject button to remove the PC card from its slot.

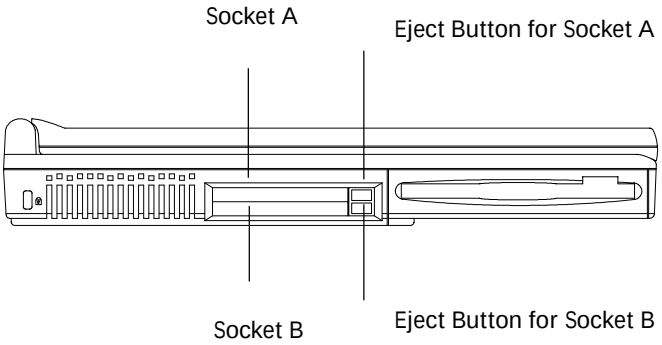

Using the Hot Keys

Located on the bottom-left edge of the keyboard layout is a colored Fn key. The Fn key function allows you to change operational features instantly. When you use the following functions, press and hold the Fn key; then press the appropriate function key.

Hot Key	System Features
Fn + F3	Expand LCD display
Fn + F6	Toggle CRT/LCD/LCD+CRT
Fn + F9	Decrease LCD brightness
Fn + F10	Increase LCD brightness
Fn + F11	Decrease audio volume
Fn + F12	Increase audio volume
Fn + Z	Turn audio mute on/off
Fn + Esc	Suspend/Resume

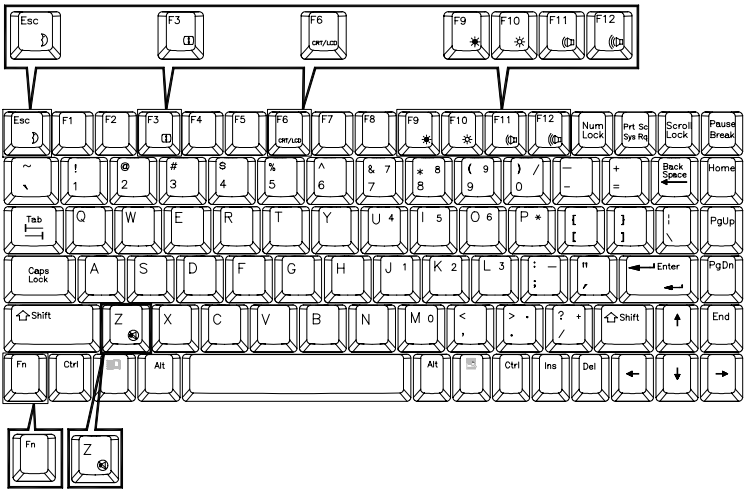
Esc
F3
F6
CRT/LCD
F9
F10
F11
F12
Num Lock
Prt Sc Sys Rq
Scroll Lock
Pause Break
Back Space
Home
Tab
PgUp
Caps Lock
Enter
PgDn
Shift
End
Fn
Ctrl
Alt
Ins
Del
Z

Using the Numeric Keypad

The Notebook features an 88-key keyboard with an embedded numeric keypad for easy numeric data input. The colored keys in the middle section of the keyboard will function as a Numeric Keypad. When the numeric keypad is engaged, the NumLock LED indicator shines green light.

Follow these steps to access the Numeric Keypad:

- Press the NumLock Key to activate the Numeric Keypad.
- Press the Fn key and colored keys together to activate the Numeric keypad.

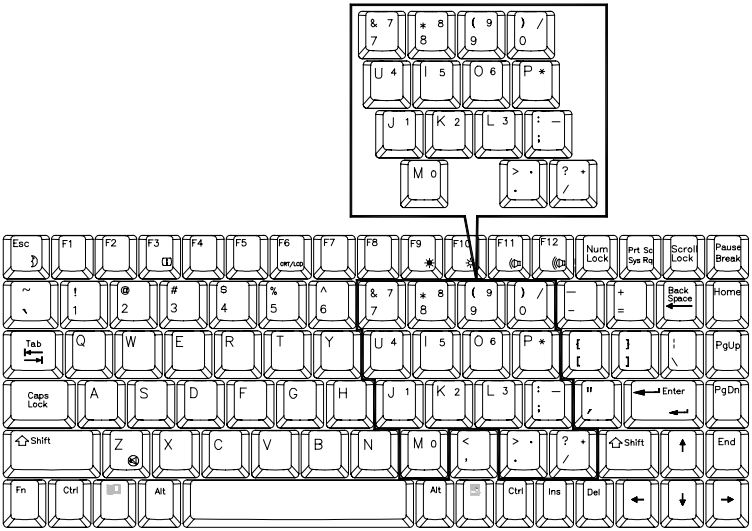

Using the Power Management

The system provides you with various modes to manage its power consumption while maintaining system performance. Please refer to Chapter 3: BIOS Utilities, System Configuration Utility, Power Menu for more information.

Advanced Power Management (APM 1.2)

The system provides built-in Advanced Power Management (APM 1.2) support to reduce power consumption. APM function varies depending on the operation system you are using. Some operation systems do not support APM, such as Windows NT, and therefore, cannot take advantage of the system's capabilities in this area.

Global Standby

In Global Standby mode, the CPU clock will be stopped and most controllable peripheral devices will be power off. If the idle timer expires before any system activity is detected, the system will change from Standby mode into Suspend mode.

Hard Disk Standby

The system will turn off the computer's hard disk drive motor if it has not been accessed after a specified period of time. The motor will be turned back on if the system attempts to read or write data to it.

Suspend and Resume

When at extremely low power, you can enter suspend mode to save power. In suspend mode, all tasks are stopped and stored in memory to save power. The system features two levels of suspend mode: Powered-On-Suspend (POS) mode and Suspend-To-Disk (STD) mode.

Another useful feature is resume mode. This feature allows you to turn the computer's power off without exiting your software application. When you turn the power on again, you can resume work where you left off, because the screen display is restored as you left it. This saves time and battery power.

Caution: Do not enter suspend mode when you are
1. Accessing any of the disk drives, such as HDD, FDD or CD-ROM drives.
2. Using the audio features or playing back video.
3. Playing a DOS game.

Powered On Suspend (POS)

Of the suspend modes, Powered-On-Suspend saves the least amount of power. However, it takes the shortest time to return to full operation.

Resume from POS Mode

The system can resume from Powered-On-Suspend mode by:

- Alarm resume (month/day/hour/minute)
- Modem ring
- Pressing any keyboard key.
- Pressing the power button (if configured as Suspend/Resume function under SCU)

Suspend To Disk (STD)

Suspend to Disk is a 0-volt suspend mode for system power management. STD mode saves the maximum power but takes the longest time to return to full operation.

1 Use your operation system's FDISK program to delete all partitions of the hard disk if any already exist on the target drive.

2 Boot the system and run the 0VMAKFIL.EXE Utility to create the Suspend to Disk partition on the hard disk. The size of Suspend to Disk partition will be the installed DRAM (n) plus 8MB integrated video RAM.

:\>0VMAKFIL –Pn

For example, if the system DRAM is 32MB, 0VMAKFIL will create a partiton size of approximately 40MB.

:\>0VMAKFIL –P32

Resume from STD Mode

The system will resume from Suspend-To-Disk mode by:

- Power back on
- Alarm resume (month/day/hour/minute)

Suspend To RAM (STR)

Suspend-To-RAM mode is the medium level of system power management.

Resume from STR Mode

The system will resume from Suspend-To RAM mode by:

- Alarm resume (month/day/hour/minute)
- Modem ring
- Pressing the power button (if configured as Suspend/Resume function under SCU)

Attaching Peripheral Devices

To extend the computer's functions, you can attach the following peripheral devices to the computer through the ports or jacks on the rear panel of computer.

Attaching a Phone Line (option)

The notebook is equipped with a phone jack for connecting a phone line. To enable the function of a built-in modem, the users have to insert a modem card (Optional) into the socket on the mainboard and attach a phone cord to the jack.

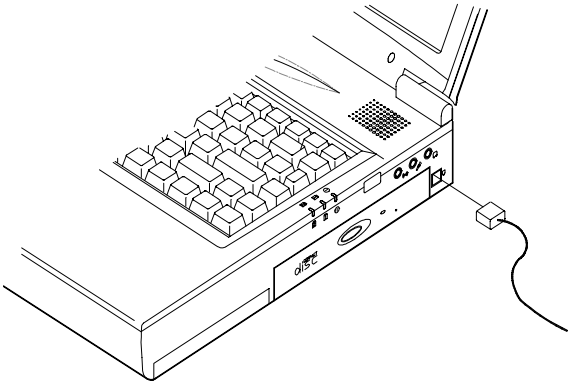

Attaching a Parallel Printer

You may connect any standard Centronics parallel printer to your computer through the parallel port.

1. Turn the system power off.
2. Connect the cable to the parallel port on the rear of the computer.
3. Tighten the screws that fasten the cable to the parallel port.
4. Insert the other end of the cable to the printer's connector. Fasten the cable's connector.
5. Turn on the printer and computer.

In addition, you also need to install the manufacturer-supplied driver for the printer. Refer to the device's user's guide for more information. If the connected printer supports EPP (Enhanced Parallel Port) or ECP (Extended Capabilities Port) mode, please enter System Configuration Utility (SCU) to configure the required setting.

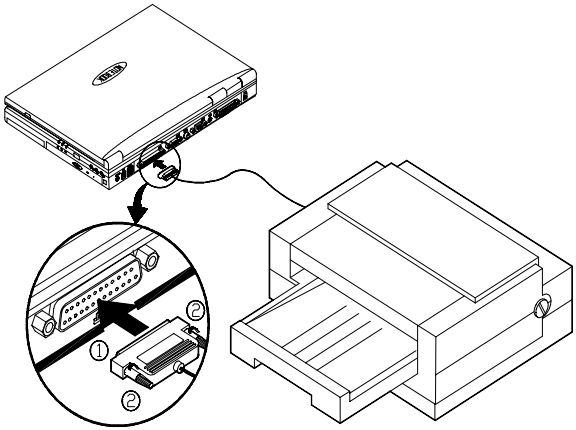

Attaching a TV Set

The S-Video jack on the rear panel of the computer is used for transmitting video signals to a TV set. You may need to select the video standard for video display.

Attach the TV set as shown below.

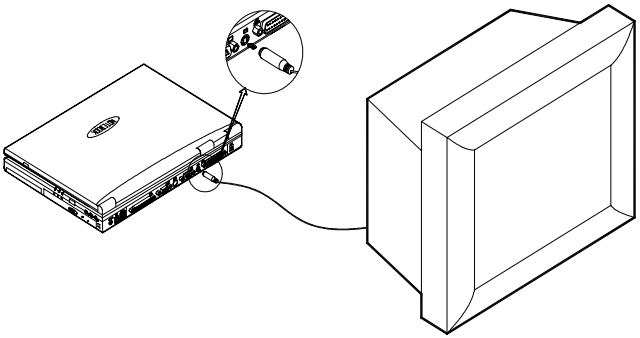

Note:
Different countries use different TV broadcast standards. A TV set must comply with the appropriate standard to properly receive broadcast signals. You should refer to your TV user guide to make sure which TV standard you are using.

Attaching a USB-compatible Device

The computer provides a USB port for the connection of a USB-compatible keyboard, mouse, or other devices. Attach the device as shown below.

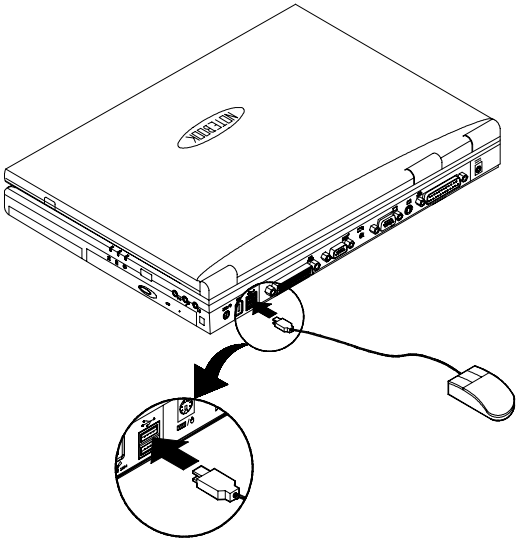

Attaching a Serial Mouse

The serial port features a 9-pin connector. You can connect any serial device such as a mouse to this port.

1. Turn the system power off.
2. Connect the cable to the serial port on the rear of the computer.
3. Tighten the screws that fasten the cable to the serial port.
4. Turn on the computer.

In addition, you may need to install the manufacturer-supplied driver for the serial mouse. Refer to the device's user's guide for more information.

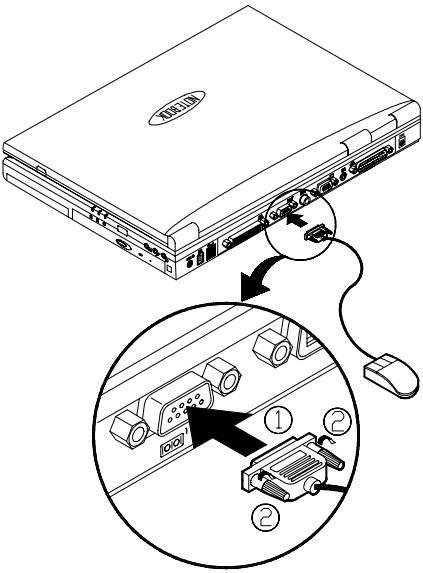

Attaching an External Monitor (CRT)

The computer is capable of displaying not only on the LCD, but also on the XGA compatible displays attached to the computer. Information can be displayed on both the LCD and the external monitor simultaneously. Enter the System Configuration Utility (SCU) to select the appropriate parameters or use the Fn + F6 keys (refer to Chapter 2, Using Hot Keys).

1. Turn the system power off.
2. Connect the cable to the CRT port on the rear of the computer.
3. Tighten the screws that fasten the cable to the CRT port.
4. Insert the other end of the cable to the external monitor.
5. Turn on the computer.

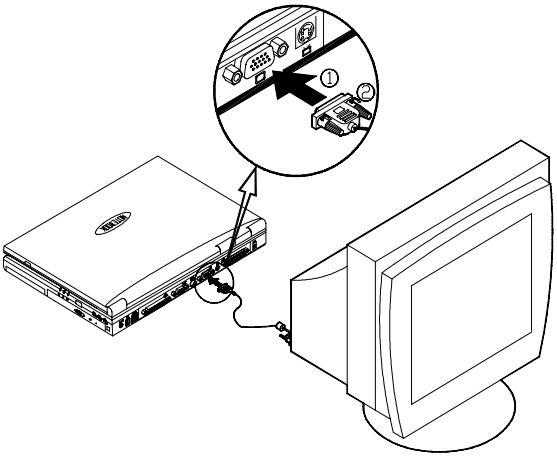

Attaching a PS/2 Keyboard or Mouse
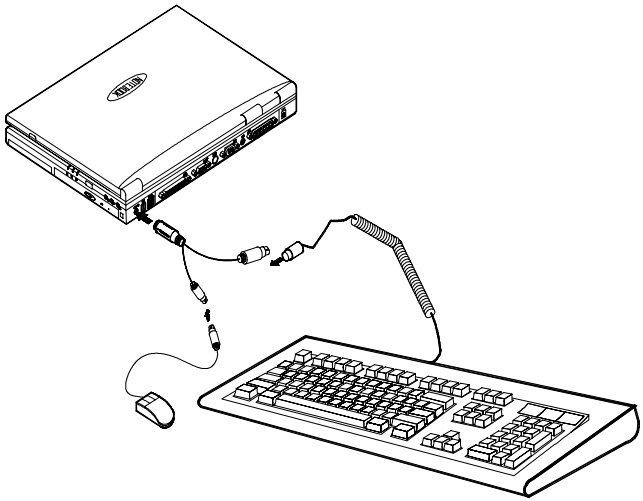
The computer can be operated with an external PS/2 keyboard or mouse. For most types of keyboard or mouse, you must use a PS/2 transfer cable to connect the keyboard (or mouse) with the computer. Attach the external keyboard or mouse as shown below.