Chapter 1: Getting Started

This chapter provides you with the short instruction of notebook computer system that will help you to get the basic understanding about the computer.

Checking the Items
Operating Environment
Providing Power
By AC Power Adapter
By Battery Pack
Opening the LCD Cover
Front View
Rear View
Left-Side View
Right-Side View
Bottom View

Checking the Items

Carefully remove everything from the shipping box and check the items one by one. If any item is missing or damaged, contact your dealer immediately.

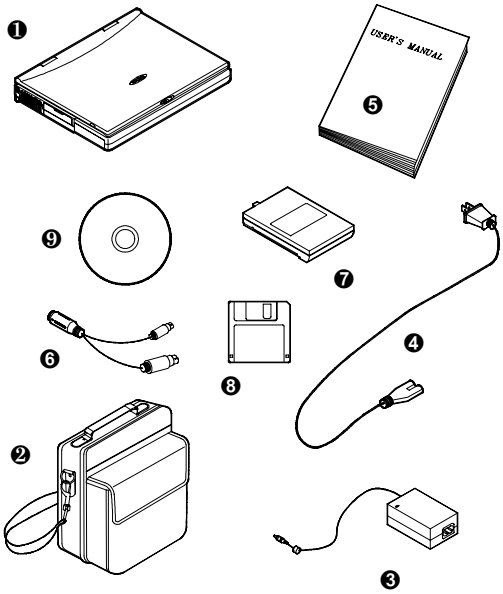

1 Notebook Computer
2 Carring Bag
3 Power Adapter
4 Power Cord
5 User's Manual
6 PS/2 Transfer Cable
7 Battery Pack
8 Utilities Diskette(s)
9 CD-ROM

Operating Environment

As with any other precision electronic equipment, proper care and operation of your computer will prolong the use period. Make sure that the computer is not:

- Exposed to excessively heat or direct sunlight.
- Shocked or vibrated.
- Exposed to strong magnetic fields.
- Left in a place where foreign matter or moisture may affect the system.

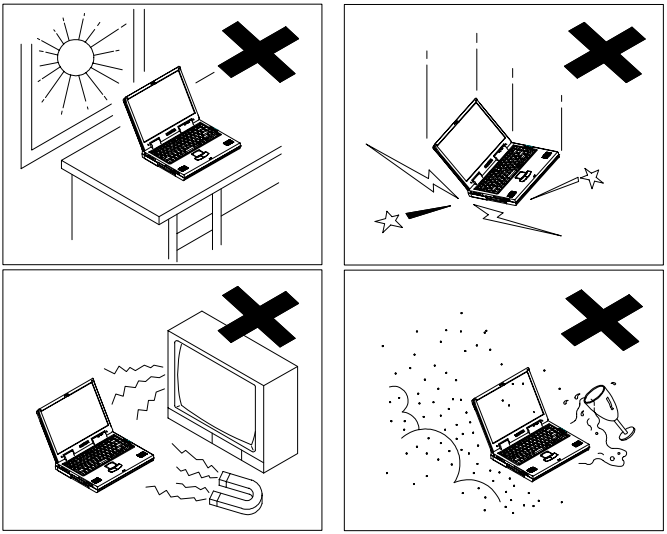

Providing Power

The notebook computer is convenient for you to use it anywhere: at home, in the office, or on the road. For different conditions you must use different power sources. The AC adapter is good for home or office whereas the battery pack is ideal for you to use the computer on the road.

By AC Power Adapter

Use only the power adapter that comes with your computer. An incorrect type of power adapter will cause damage to the computer and its components.

1. Plug the power adapter cord into the power jack on the rear panel of the computer.
2. Connect the power adapter with the power cord.
3. Plug the power cord into a properly grounded outlet.
4. Refer to Chapter 1, System Status Indicators for more information on system power status.

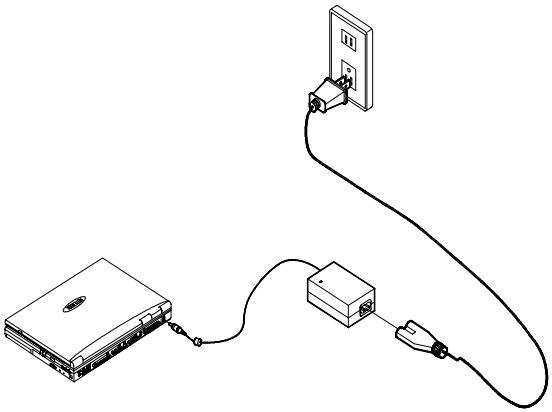

By Battery Pack

The battery pack provides power for continuous portable operation of the computer. When using the battery no external power source is required. The actual operation time is related to the application and the configuration you're using.

Inserting

1. Turn the computer over.
2. Insert the battery pack firmly into the computer.
3. The latch will click into the place when it is seated.

Removing

1. Turn the computer over.
2. Press the latch in the indicated direction to release the battery pack.
3. Carefully lift the battery pack from the computer.

Note: The battery has protection design to detect the temperature while recharging or discharging. To ensure the battery can be recharged, while discharging, wait until the battery returns to normal temperature, then recharge the battery.

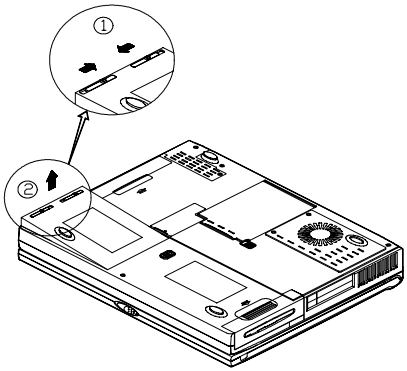

Opening the LCD Cover

1. Move the latch to the right to release the cover.
2. Lift the cover to reveal the LCD panel and keyboard.
3. Adjust the LCD panel to a comfortable viewing angle.
4. Press the power button to turn the system on or off (refer to Chapter1, Front View for more information on the power button).

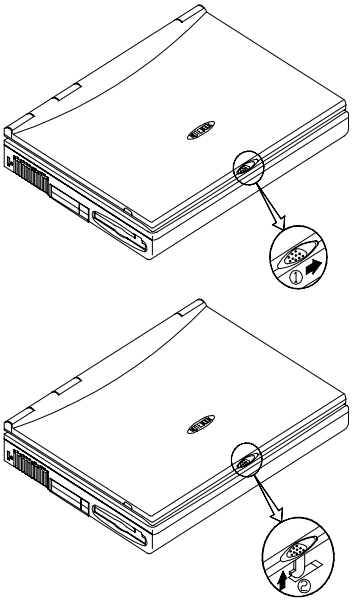

Front View

LCD Panel

The computer provides you with a XGA TFT LCD panel. Depending on the model you purchased, it can either be a 13.3” or 14.1” flat panel. The LCD panel is driven by a AGP bus video controller with 8MB video memory.

Microphone

The built-in microphone provides clear sound effect.

Trackpad and Buttons

The pointing device features a sensitive glide pad for precise movements. It functions like a two-button mouse does. The right trackpad button is equivalent to the right mouse button; the left trackpad button is equivalent to the left mouse button.

Stereo Speakers

Two built-in speakers provides clear stereo sound.

Keyboard

The 88-key Windows 95 keyboard is integrated with the numeric keypad.

Ventilation

The ventilation is designed to dissipate the LCD’s operation heat. Do not block or obstruct it during operation.

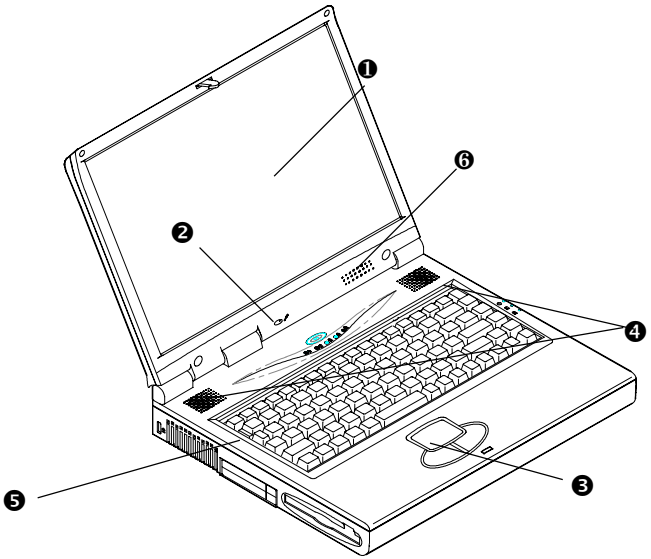

1	LCD Panel
2	Microphone
3	Trackpad and Button
4	Stereo Speakers
5	Keyboard
6	Ventilation

Power Button

⏻	Use this button to turn the system on or off.
	After proper configuration under SCU, this button can be used as suspend/resume hot button (refer to Chapter 3: BIOS Utilities, Power Menu for more information).

Note : After turning off the system, wait for a few seconds to power it on

Power Button

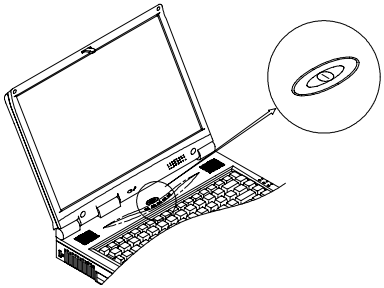

System Status Indicators

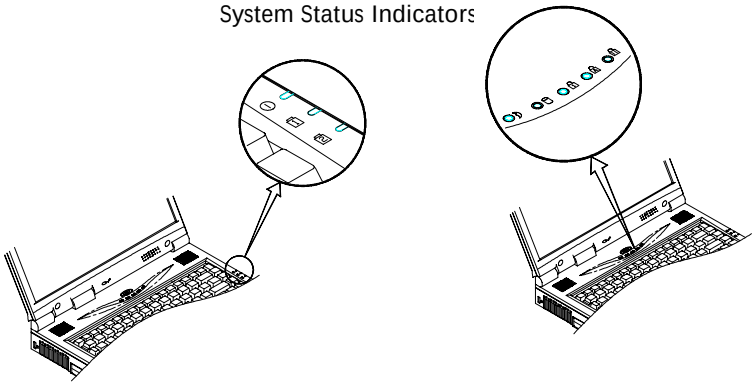

System Status Indicators

The system-status indicators on the computer show the current status of your computer. Each indicator is identified with a symbol. The following shows the meaning of each icon:

Icon	Color	Description
	Green	Battery power is used with the system turning on.
	Red	AC power is used with the system turning on.
	Blinking Red	Battery power is critically low.
	Red	Battery is being charged.
	Green	Battery is fully charged.
	Green	The embedded number-lock feature is activated
	Green	The Caps Lock feature is activated.
	Green	The Screen Lock feature is activated.
	Green	The system has entered the configured suspend mode.
	Green	The hard disk is being accessed.

Rear Viiew

Power Jack

Plug the AC adapter into this socket for power supply. To disconnect, pull the plug (not the cord) directly back.

Parallel Port

This parallel port supports EPP (Enhanced Parallel Port) and ECP (Extended Capabilities Port) modes.

S-Video Jack

Use this jack to transmit video signal to a TV set (only in Windows system). You may need to select the video standard (NTSC/PAL) for video display.

External Monitor (CRT) Port

This port is used for transmission of the display to an external monitor.
Simultaneous display with the LCD panel is avaliable.

Serial Port

This por is UART 16C550 compatible. It features a 9-pin connector for the addition of an external mouse for example.

Expansion Port

This port is used to connect the proprietary Port Replicator.

Dual USB Ports

This dual Universial Serial Bus (USB) ports simplify the expansion capability for peripheral devices.

1394 Port (option)

A newly developed port which connects with the digital camera.

PS/2 Type Port

The PS/2 Type Port is used for connecting an external PS/2 type mouse or keyboard.

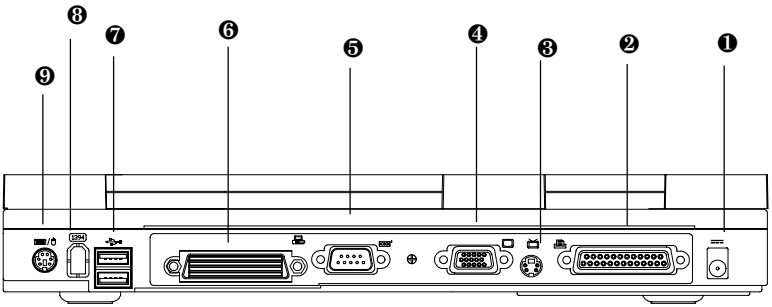

1 Power Jack
2 Parallel Port
3 S-Video Jack
4 External Monitor (CRT) Port
5 Serial Port
6 Expansion Port
7 Dual USB Port
8 1394 Port
9 PS/2 Type Port

Left-Side View

Removable 3.5” Floppy Disk Drive

The Notebook comes standard with a removable 3,5” 1.44MB floppy drive installed in a bay. The floppy disk drive module can be replaced with optional drive units, such as a 12.7mm high, 2.5” hard disk drive or a 12. 7mm high,120MB LS-120. (Please refer to Chapter 2: Operation for more information on using floppy disk drive.)

PC Card Sockets

The notebook provides two 3.3V/5V PCMCIA sockets. Two Type II or one Type III PC card can be used. Both sockets will expand the system capabilities when a PC card is inserted. To eject the PC card, press the appropriate eject button. (Please refer to Chapter 2: Operation for more information on Using PC Card socket.)

Ventilation

The Notebook provides ventilation to dissipate the system’s operating heat. Do not block or obstruct it during operation.

Security Connector

The Security Connector is used to protect your Notebook from being stolen. Wrap the steel cable around your desk. Next, insert the locking device into this security connector.

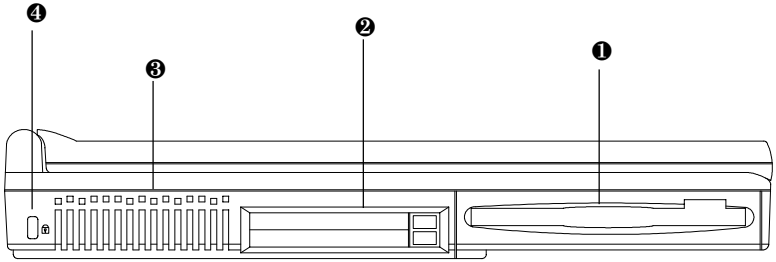

1 Removable 3.5¨ Floppy Disk Drive
2 PC Card Sockets
3 Ventilation
4 Security Connector

Right-Side View

Speaker-out Jack

Headphone and speakers can be attached to the computer through this jack.

Microphone-in Jack

You can use this jack to connect a microphone to the computer.

Line-in Jack

External audio source can be fed into the Notebook through this jack.

Infrared

The notebook is equipped with an infrared feature that allows the communication with an infrared-compatible device. The Infrared port supports IrDA (HPSIR) 1.1 mode, Amplitude Shifted Keyed IR (ASKIR) mode, and Fast IR

Removable 5.25” CD-ROM Drive

The notebook comes standard with a 5.25” CD-ROM drive. The removable CD-ROM drive module can be replaced with a 12.7mm high DVD-ROM drive. (Please refer to the Chapter 2: Operation for more information on using the CD-ROM.)

Phone Jack (option)

The phone jack is used to support modem or LAN. You can attach a phone line to the jack and insert a modem card (optional) into the modem socket on the mainboard.

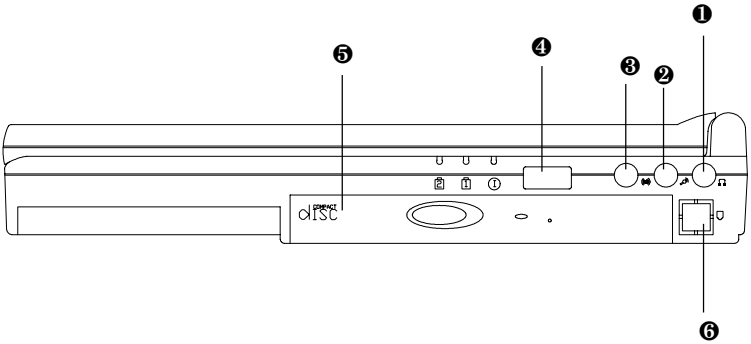

1 Speaker-out Jack
2 Microphone-in Jack
3 Line-in Jack
4 Infrared
5 Removable 5.25" CD-ROM Drive
6 Phone Jack (option)

Bottom View

CPU Cover

Detaching the screws to remove the cover. The CPU module is under the heat sink and the cover. You may upgrade the CPU for higher system performance.

Hard Disk Drive

Push the latch to release the Hard Disk Drive module from its bay.

CD-ROM Drive

Push the latch to release the CD-ROM module from its bay.

Battery Pack

Push the latch to release the Battery Pack from its bay.

Floppy Disk Drive

Push the latch to release the Floppy Disk Drive module from its bay.

PC Card Sockets

Please refer to “Left-Side View” for more information.

Cover

The cover is used to fix the CD-ROM drive, Hard Disk Drive and PC Card Sockets.

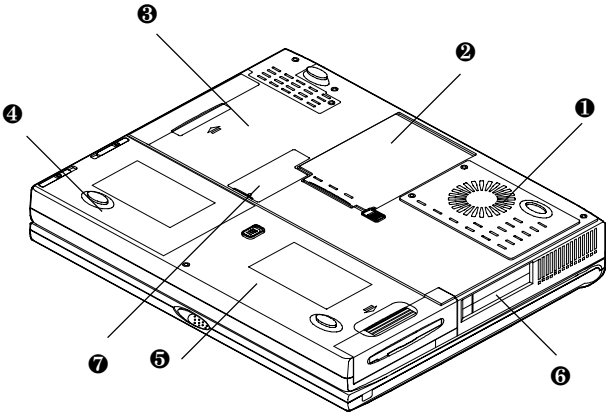

1 CPU Cover
2 Hard Disk Drive
3 CD-ROM Drive
4 Battery Pack
5 Floppy Disk Drive
6 PC Card Sockets
7 Cover